

PROAT®

Catalog

FACDC

AC+DC IsolationMonitor

FACDC

AC+DC Isolation Monitor with Automatic Reset and Real-Time Display

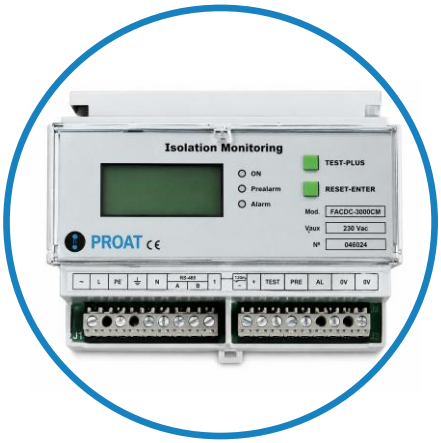

✓ Detects **symmetrical and asymmetrical** insulation faults in single-phase and three-phase AC/DC systems in any of the phases or between the neutral point and earth.

✓ **2** independent **potential-free switching output contacts**, with programmable trigger levels and time delays: pre-alarm and alarm

✓ **NA or NC contacts**. Configurable direct/reverse logic

✓ **Pre-alarm:** trigger level of 10–200 kΩ and a delay of 10–30 seconds, depending on the model

✓ **Alarm**: trigger range 5–50 kΩ and trigger delay 1–10 seconds

✓ **Automatic reset** configurable from 0 to 60 minutes after an insulation fault clears

✓ **Real-time monitoring** of the installation's insulation level

✓ **Maximum programmable parasitic capacitance:** up to 20µF; GN versions up to 4000µF

✓ **Measurement of the installation's parasitic capacitance** in GN versions

✓ **External input** for enabling/disabling the device in GN versions

✓ For IT systems up to **1000 V_{AC} – 1500 V_{DC},** depending on the model

✓ **Modbus** communication, remote configuration for GN versions

✓ Optional **OLED display** for an operating range of -40°C to +80°C

Applications

- Monitoring for potential insulation faults in AC+DC systems isolated from earth (IT):
- Photovoltaic installations (inverters)
- Power stations
- Rectifier systems
- Lighting installations
- AC+DC auxiliary power system



Function Features

- 2 output relays with independent potential-free changeover contacts, with programmable trigger levels and time delays: Pre-alarm and Alarm
- Programming of setpoints using the **SET-MENU** buttons on the front panel:
    - Pre-alarm trigger level
    - Alarm trigger level
    - Pre-alarm time delay
    - Alarm time delay
    - Automatic reset time
    - Measure parasitic capacitance – GN models
    - Stray Capacitance
    - Modbus ID
    - Logic Relay: Reverse/Forward
    - Language: Spanish/English
- Real-time display of earth resistance measurement
- 2x8-character front panel display
- **TEST** button to simulate earth faults on (+) and (-)
- **RESET** button to restart the unit and clear the fault
- LEDs to indicate pre-alarm and alarm faults
- Electrically isolated RS-485 interface with Modbus-RTU protocol, depending on model:
    - Instantaneous insulation measurement
    - Relay status
    - View ModBus map

Models

Model	Voltage	Operating range	Alarm Level	Auxiliary voltage	DIN size	Communications
FACDC-250	250 V_{AC} | 400V_{DC}	0-250 V_{AC} | 0-400 V_{DC}	50-150kΩ y 5-45kΩ	86-264 V_{AC} | 90-370 V_{DC}	6M - 106mm	-
FACDC-250-M	250 V_{AC} | 400V_{DC}	0-250 V_{AC} | 0-400 V_{DC}	50-150kΩ y 5-45kΩ	86-264 V_{AC} | 90-370 V_{DC}	6M - 106mm	ModBus-RTU
FACDC-250-24	250 V_{AC} | 400V_{DC}	0-250 V_{AC} | 0-400 V_{DC}	50-150kΩ y 5-45kΩ	24 V_{DC}	6M - 106mm	-
FACDC-250-M-24	250 V_{AC} | 400V_{DC}	0-250 V_{AC} | 0-400 V_{DC}	50-150kΩ y 5-45kΩ	24 V_{DC}	6M - 106mm	ModBus-RTU
FACDC-400	400 V_{AC} | 600V_{DC}	0-400 V_{AC} | 0-600 V_{DC}	50-150kΩ y 5-45kΩ	86-264 V_{AC} | 90-370 V_{DC}	6M - 106mm	-
FACDC-400-M	400 V_{AC} | 600V_{DC}	0-400 V_{AC} | 0-600 V_{DC}	50-150kΩ y 5-45kΩ	86-264 V_{AC} | 90-370 V_{DC}	6M - 106mm	ModBus-RTU
FACDC-400-24	400 V_{AC} | 600V_{DC}	0-400 V_{AC} | 0-600 V_{DC}	50-150kΩ y 5-45kΩ	24 V_{DC}	6M - 106mm	-
FACDC-400-M-24	400 V_{AC} | 600V_{DC}	0-400 V_{AC} | 0-600 V_{DC}	50-150kΩ y 5-45kΩ	24 V_{DC}	6M - 106mm	ModBus-RTU
FACDC-700-GN	700 V_{AC} | 1000V_{DC}	0-700 V_{AC} | 0-1000 V_{DC}	10-200kΩ y 5-50kΩ	86-264 V_{AC} | 90-370 V_{DC}	9M - 160mm	ModBus-RTU
FACDC-700-GN-24	700 V_{AC} | 1000V_{DC}	0-700 V_{AC} | 0-1000 V_{DC}	10-200kΩ y 5-50kΩ	24 V_{DC}	9M - 160mm	ModBus-RTU
FACDC-800-GN	800 V_{AC} | 1500V_{DC}	0-800 V_{AC} | 0-1500 V_{DC}	10-200kΩ y 5-50kΩ	86-264 V_{AC} | 90-370 V_{DC}	9M - 160mm	ModBus-RTU
FACDC-800-GN-24	800 V_{AC} | 1500V_{DC}	0-800 V_{AC} | 0-1500 V_{DC}	10-200kΩ y 5-50kΩ	24 V_{DC}	9M - 160mm	ModBus-RTU
FACDC-1000-GN	1000 V_{AC} | 1500V_{DC}	0-1000 V_{AC} | 0-1500 V_{DC}	10-200kΩ y 5-50kΩ	86-264 V_{AC} | 90-370 V_{DC}	9M - 160mm	ModBus-RTU
FACDC-1000-GN-24	1000 V_{AC} | 1500V_{DC}	0-1000 V_{AC} | 0-1500 V_{DC}	10-200kΩ y 5-50kΩ	24 V_{DC}	9M - 160mm	ModBus-RTU

Optional **Tropicalized coating** by adding the suffix **-T**
Optional **OLED display** by adding the suffix **-O**
*Other models can be manufactured upon request

Connection

- Single-phase

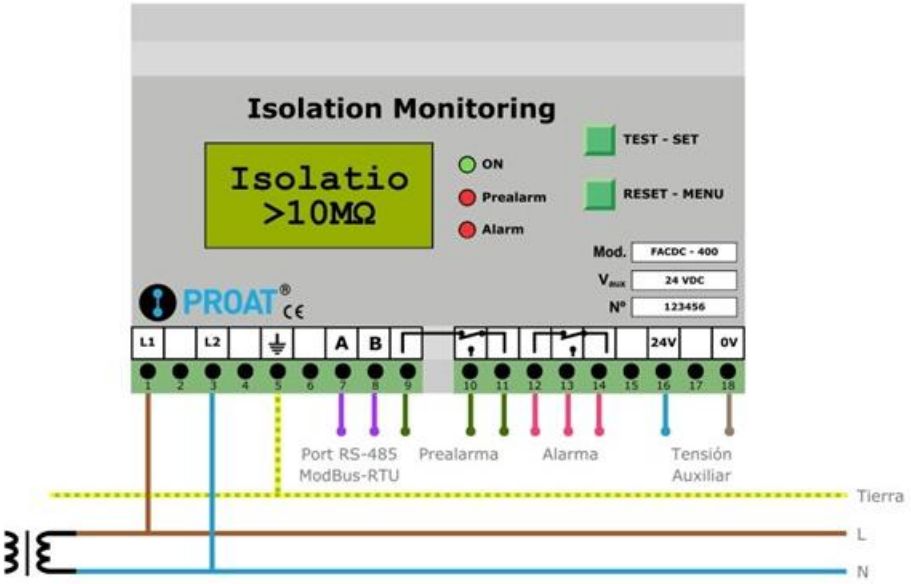

- Three-phase without neutral

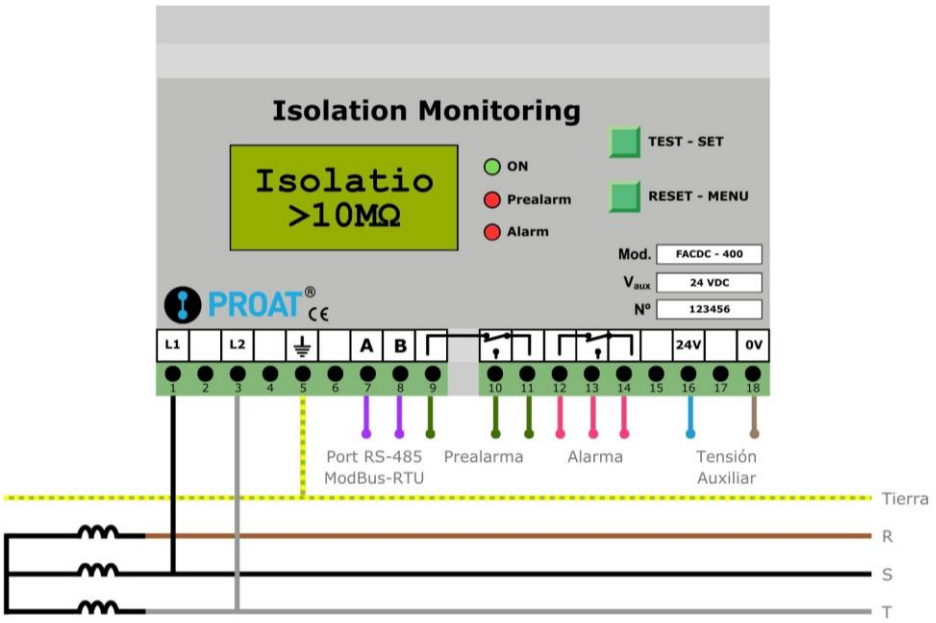

- Three-phase with neutral

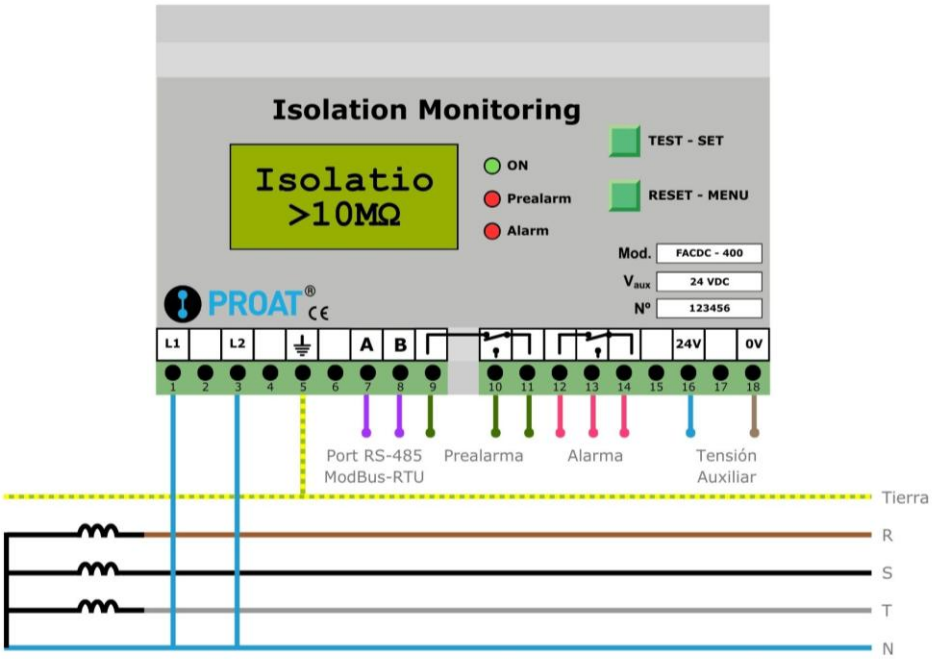

- GN Version

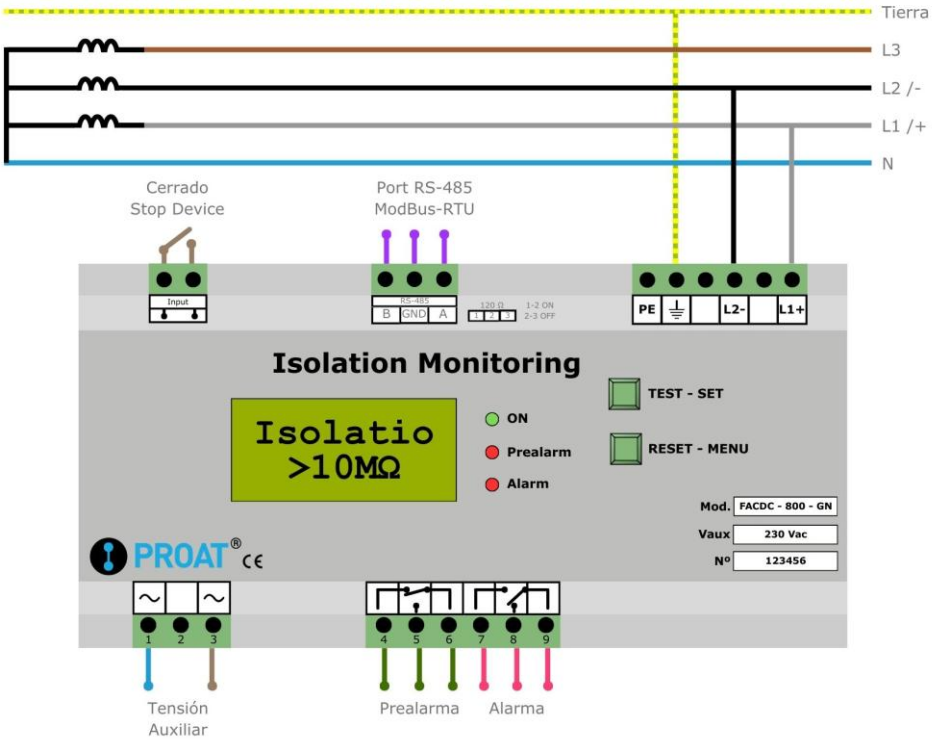

Constructive Features

- DIN rail mounting
- Front-panel terminals
- Class V0 self-extinguishing plastic box

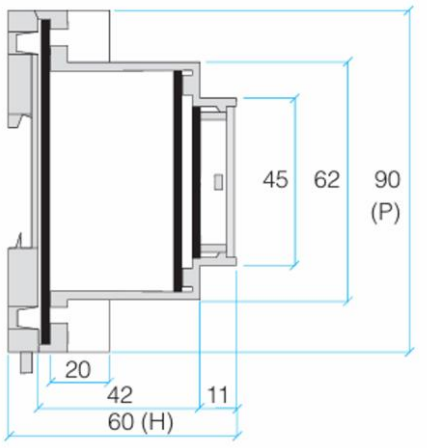

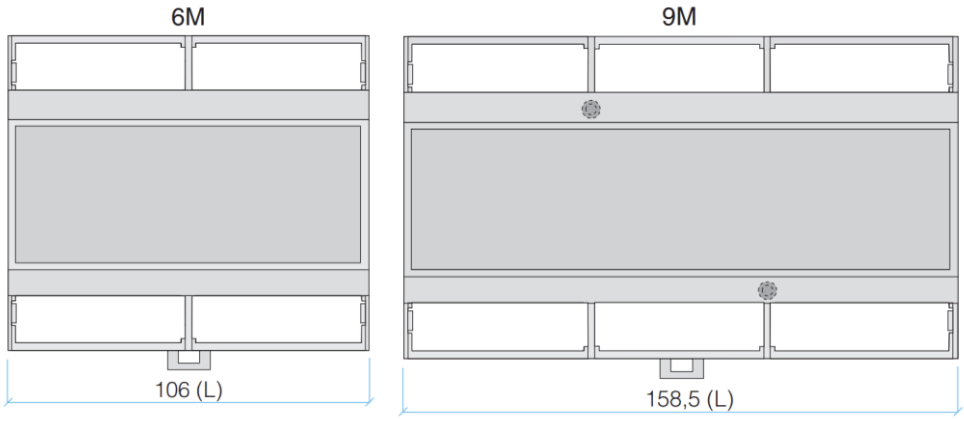

Technical Data

MODEL	FACDC	GN Version
Voltage range		
U_N monitoring range	**0 - U_N V_{AC}**	
Rated frequency F_N	0-300Hz	
Auxiliary voltage V_{AUX}	86 – 264 V_{AC} 90 – 370 V_{DC} 24 V_{DC}	
Standby power consumption	≤ 6W	
Maximum consumption	≤12W	
Response values		
RPA Pre-alarm Level	**50 kΩ - 150 kΩ**	**10 kΩ - 200 kΩ**
RAL alarm level (RAL < RPA)	**5 kΩ - 45 kΩ**	**5 kΩ - 50 kΩ**
Measuring range	1 kΩ - 1 MΩ	1 kΩ - 3 MΩ
Error de medida 1-10 kΩ	±1 kΩ	
Measurement error 1–10 kΩ	±10%	
Hysteresis	25%	
Response time with $R_{FUGA} = 0,5*R_{AL}$ (C_{PAR} < 0.5 µF)	≤5 s	
Pre-alarm timing	10-30 s	
Alarm Timing	1-10 s	
Reset time	0-60 min	
Parasitic capacitance		
Supported parasitic capacity	≤20 µF	≤4000 µF
Measurement: Parasitic capacity (RFUGA > 100K)	-	>20 µF
Measurement: Parasitic capacity (RFUGA > 500K)	-	> 5 µF
Measurement error (CPAR > 50 µF)	-	±15%
Measurement error (CPAR < 50 µF)	-	± 5 µF
Factory settings		
Pre-alarm Level	100 kΩ	
Alarm Level	10 kΩ	
Pre-alarm delay	10 s	
Alarm Timing	5 s	
Reset time	0 s	
Modbus ID	1	
Relay Logic	Direct	
Language	ESP	
Parasitic capacitance	5 µF	
Measurement circuit		
Measuring voltage	±15 V_{DC}	±24 V_{DC}
Internal resistance	>196 kΩ	>294 kΩ
Impedance at 50 Hz	>196 kΩ	>294 kΩ
Measuring current (RFUGA=0)	≤2,6 mA	
Parasitic capacitance	<20 µF	<4000µF
Types of faults detected	Symmetrical and Asymmetrical	
Front view		
ON	Green LED	
Pre-alarm	Red LED	
Alarm	Red LED	
Test button	Yes	
Reset button	Yes	
Screen	LCD 2x8 carac.	

Switching components	
Number of switching elements	2
Type of outputs	Switched relay
Voltage outputs	Voltage-free
Maximum AC load	250V_{AC} 2A
Maximum DC load	300V_{DC} 0,1A
RL switching time	< 10 ms
Service life, number of cycles	20,000,000
General	
Working mode	Continue
Assembly	DIN rail
Connection	M2.5 screw
Torque	≤0,4 Nm
Degree of protection	IP20
Tropicalized coating (Optional)	IPC-CC-830B
Flammability	UL94V-0
Weight	350 gr
Operating temperaturas – LCD display	-20ºC...+70ºC
Storage temperatura – LCD display	-30ºC...+80ºC
Operating temperature – OLED display	-40ºC...+80ºC
Storage temperature – OLED display	-40ºC...+80ºC
Relative humidity (non-condensing)	<95%
Method for changing values:	Front opening <95%
Standards	
Electrical safety requirements	UNE-EN 61010-1
Electrical safety requirements	UNE-EN 61010-2-0081
Electromagnetic compatibility (CEM)	UNE-EN 61000-6-1
Electromagnetic compatibility (EMC)	UNE-EN 61000-6-3/A1
European Directive	2006/95/CE
European Directive	2004/108/CE
Standard	IEC-61557-8
Communications	
Interface	RS-485
Protocol	ModBus-RTU
Parameters	9600,8,N,1
ID ModBus	1-248
Available Functions	3,4 (3,4,6 for GN)
Master-Slave	Slave
Cable length (m)	<1200
Connection	Terminals A/B
External Input Lock Parameters	
Activation	Closed Contact
Deactivation	Open Contact
Dielectric test	
Input V_{DC} – V_{AUX}	4k V_{RMS} – 1min
Input V_{DC} – Output Contacts	4k V_{RMS} – 1min
V_{AUX} – Output contacts	4k V_{RMS} – 1min

Response Time vs. Resistance (kΩ) Graph – GN Model

